PFISTER

Tub Spout

J15-020B Finish*(B)* ❑
J15-020BG Finish*(BG)* ❑
J15-020C Finish*(C)* ❑
J15-020K Finish*(K)* ❑

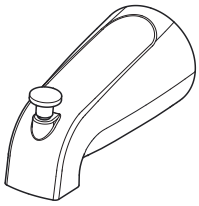

Specifications

Features

- Quick Connect Tub Spout
- Job Pack of 12
- Limited Lifetime Warranty

Code Compliance

Pfister products are designed and manufactured in compliance with the following standards and codes:

- IAPMO Certified to ASME A112.18.1

Dimensions

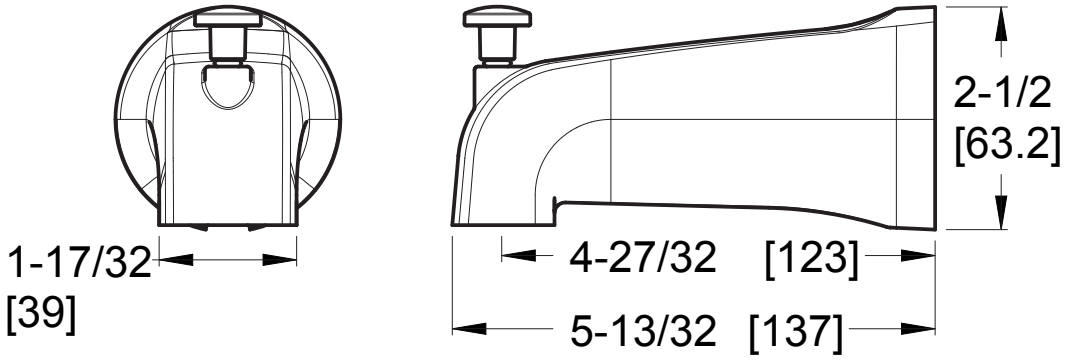

Copyright © 2025, Pfister Faucets, an ASSA ABLOY Group company. All rights reserved.
Reproduction in whole or in part without the express permission of Pfister Faucets is prohibited.